VELOCITY 56 WTP

PROFESSIONAL 22” / 56CM WHEELED PUSH TRIMMER

P/N: WGVT30

WEIBANG®



POWERED BY WEIBANG

1 year COMMERCIAL WARRANTY

LEARN MORE ABOUT THE 56 WTP

Model	**56 WTP**
Cutting Width (cm/”)	56 / 22
Cutter Deck Material	Steel
Drive	Push
Drive Speed	N/A
Cutting Attachment	Heavy Duty Head
Engine Model	WEIBANG X200
Offset Cutting Deck	Yes
Height Adjustment	Quick Feed Head
Cutting Heights	51-137mm (8 position)

56 WTP KEY FEATURES -

- 22” / 56cm Cutting Width
- Push Drive
- High Zone Air Intake
- Quick Feed Head with Metal Inserts
- Free Spinning Trimming Support Cup
- WEIBANG X200 196cc Engine
- Quick Release Adjustable Handles
- Large 14” Wheels
- Heavy Duty Front Bumper

VELOCITY HIGHLIGHTS

PROFESSIONAL WHEELED TRIMMERS

56 WTP / 56 WTV

WEIBANG®

PUSH OR VARI-SPEED



The Velocity Wheeled Trimmer range features push or variable speed models. The Vari Speed gearbox has a durable aluminium housing and drive speeds from 2.16 - 4.32km/h for high productivity along large areas or sloped terrain.

HEAVY DUTY BELTS & PULLEYS

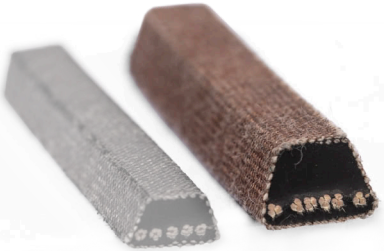

The WEIBANG commercial Wheeled Trimmers are fitted with heavy duty pulleys and cutting belts to ensure reliability. The belts used on the Velocity Wheeled Trimmer are double the thickness of those used by other Wheeled Trimmer manufacturers.



COMMERCIAL CUTTING HEAD

The innovative cutting head features height of cut plates with metal inserts for fast effortless loading and durability, while the support cup has integrated bearings to spin freely during use to reduce wear.

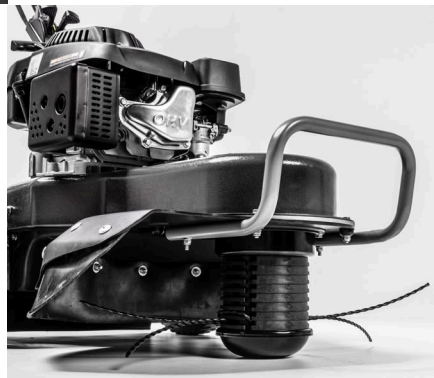

56cm / 22" CUTTING WIDTH

The Velocity Wheeled Trimmer features a wide 56cm / 22" cutting width to clear long hedgerows and fencelines with ease. The offset cutter deck design allows trimming up to the edge and the wide trimmer guard protects users from debris.

HIGH ZONE AIR INTAKE



The engine air filter is fitted with a snorkel pipe extending to the handle cockpit ensuring a constant supply of clean air to extend the longevity of the engine.

EASY STORAGE & MAINTENANCE

The quick release height adjustable handles can fully fold and lock for storage, or an upright maintenance position for access to the underside of the deck and blade.

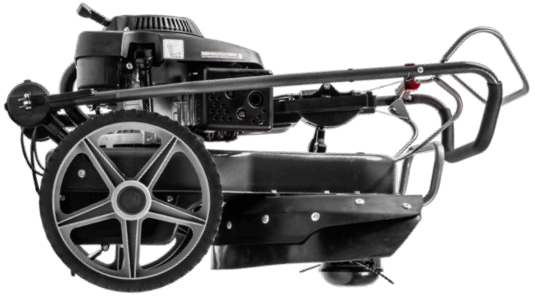

VELOCITY 56 WTV

PROFESSIONAL 22” / 56CM WHEELED VARI-SPEED TRIMMER

P/N: WGVT34

WEIBANG®



1 year
COMMERCIAL WARRANTY

LEARN MORE ABOUT THE 56 WTV

Model	**56 WTV**
Cutting Width (cm/”)	56 / 22
Cutter Deck Material	Steel
Drive	Vari-Speed
Drive Speed	2.16 - 4.32 km/h
Cutting Attachment	Heavy Duty Head
Engine Model	WEIBANG X200
Offset Cutting Deck	Yes
Height Adjustment	Quick Feed Head
Cutting Heights	51-137mm (8 position)

56 WTV KEY FEATURES -

- 22” / 56cm Cutting Width
- Vari-Speed Drive up to 4.32 km/h
- High Zone Air Intake
- Quick Feed Head with Metal Inserts
- Free Spinning Trimming Support Cup
- WEIBANG X200 196cc Engine
- Quick Release Adjustable Handles
- Large 14” Wheels
- Heavy Duty Front Bumper

VELOCITY HIGHLIGHTS

PROFESSIONAL WHEELED TRIMMERS

56 WTP / 56 WTV

WEIBANG®

PUSH OR VARI-SPEED



The Velocity Wheeled Trimmer range features push or variable speed models. The Vari Speed gearbox has a durable aluminium housing and drive speeds from 2.16 - 4.32km/h for high productivity along large areas or sloped terrain.

HEAVY DUTY BELTS & PULLEYS

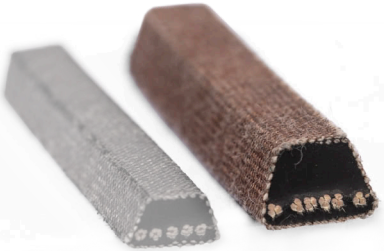

The WEIBANG commercial Wheeled Trimmers are fitted with heavy duty pulleys and cutting belts to ensure reliability. The belts used on the Velocity Wheeled Trimmer are double the thickness of those used by other Wheeled Trimmer manufacturers.



COMMERCIAL CUTTING HEAD

The innovative cutting head features height of cut plates with metal inserts for fast effortless loading and durability, while the support cup has integrated bearings to spin freely during use to reduce wear.

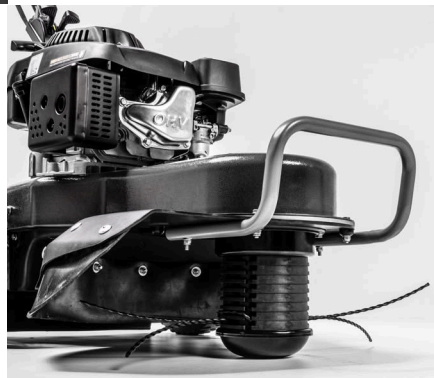

56cm / 22" CUTTING WIDTH

The Velocity Wheeled Trimmer features a wide 56cm / 22" cutting width to clear long hedgerows and fencelines with ease. The offset cutter deck design allows trimming up to the edge and the wide trimmer guard protects users from debris.

HIGH ZONE AIR INTAKE



The engine air filter is fitted with a snorkel pipe extending to the handle cockpit ensuring a constant supply of clean air to extend the longevity of the engine.

EASY STORAGE & MAINTENANCE

The quick release height adjustable handles can fully fold and lock for storage, or an upright maintenance position for access to the underside of the deck and blade.

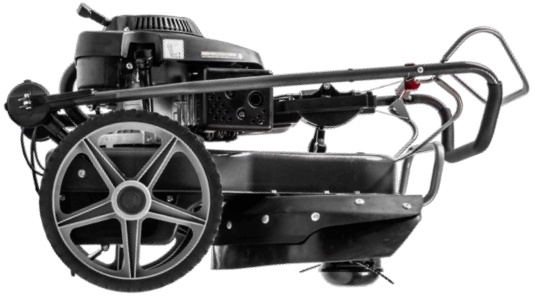

VELOCITY 76 FBM

PROFESSIONAL 30" / 76CM FIELD & BRUSH MOWER

P/N: WGVT38

WEIBANG®



LEARN MORE ABOUT THE 76 FBM

Model	**76 FBM**
Cutting Width (cm/")	76 / 30
Cutter Deck	Steel / Pivoting
Transmission	Peerless MST - 3 Fwd + 1 Rev
Drive Speed	1.8 - 5.2 km/h
Cutting Method	Mulching
Powered Steering	Yes - Individual Drum Brakes
Engine	WEIBANG X700 V-Twin
Height Adjustment	Steel Skid Plates
Cutting Heights	92-201mm (4 position)

76 FBM KEY FEATURES -

- 30" / 76cm Cutting Width
- 3 speed Drive up to 5.2 km/h
- Reverse Drive
- Pivoting Cutter Deck
- Heavy Duty Blade & Spindle
- WEIBANG X700 Twin Cylinder Engine
- Powered Steering
- Large 15L Fuel Tank
- Heavy Duty Front Bumper

VELOCITY HIGHLIGHTS

PROFESSIONAL FIELD & BRUSH MOWERS

76 FBM / 86 FBM

WEIBANG®

MULCH OR SIDE DISCHARGE DECK

The 76cm deck is designed to cut and recut for a more thorough mulching effect. The 86cm side discharge deck allows cut material to be quickly ejected and is ideal for the most demanding conditions.



PIVOTING CUTTER DECK

The mower deck is capable of pivoting a maximum 12.5% up and 12.5% down to cope with uneven ground and avoid scalping as well as being removable for cleaning and maintenance.





V-TWIN POWER

To ensure a consistent delivery and the highest levels of performance we chose the commercial grade WEIBANG X700 and X760 Twin cylinder engines, giving up to 17 kW of power output.



LONG RANGE 15L FUEL TANK

To increase productivity all models are fitted with an extra large 15L fuel tank, allowing extended mowing times when covering large remote overgrown areas.

COMMERCIAL TRANSMISSION

Fitted with a commercial Peerless MST manual transmission to cope with the demands required when working in tough overgrown uneven terrain.



POWERED STEERING

Thanks to the integrated drum wheel brakes, simply pull the left lever to turn left, and the right lever to turn right, with near zero-turn ability.

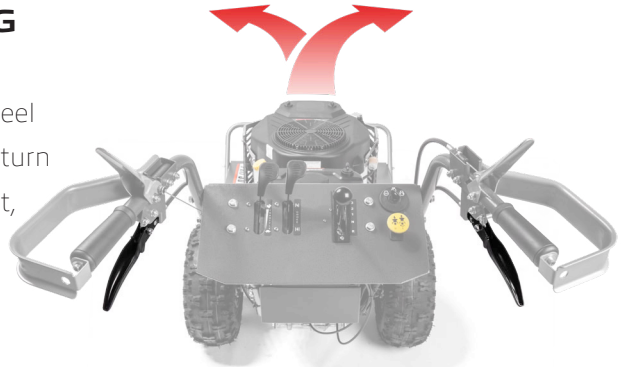

VELOCITY 86 FBM

PROFESSIONAL 34" / 86CM FIELD & BRUSH MOWER

P/N: WGVT40

WEIBANG®

POWERED BY WEIBANG V-TWIN

1 year COMMERCIAL WARRANTY



LEARN MORE ABOUT THE 86 FBM

Model	**86 FBM**
Cutting Width (cm/")	86 / 34
Cutter Deck	Steel / Pivoting
Transmission	Peerless MST - 3 Fwd + 1 Rev
Drive Speed	1.8 - 5.2 km/h
Cutting Method	Mulching
Powered Steering	Yes - Individual Drum Brakes
Engine	WEIBANG X760 V-Twin
Height Adjustment	Steel Skid Plates
Cutting Heights	92-201mm (4 position)

86 FBM KEY FEATURES -

- 34" / 86cm Cutting Width
- 3 speed Drive up to 5.2 km/h
- Reverse Drive
- Pivoting Side Discharge Cutter Deck
- Heavy Duty Blade & Spindle
- WEIBANG X760 Twin Cylinder Engine
- Powered Steering
- Large 15L Fuel Tank
- Heavy Duty Front Bumper

VELOCITY HIGHLIGHTS

PROFESSIONAL FIELD & BRUSH MOWERS

76 FBM / 86 FBM

WEIBANG®

MULCH OR SIDE DISCHARGE DECK

The 76cm deck is designed to cut and recut for a more thorough mulching effect. The 86cm side discharge deck allows cut material to be quickly ejected and is ideal for the most demanding conditions.



PIVOTING CUTTER DECK

The mower deck is capable of pivoting a maximum 12.5% up and 12.5% down to cope with uneven ground and avoid scalping as well as being removable for cleaning and maintenance.





V-TWIN POWER

To ensure a consistent delivery and the highest levels of performance we chose the commercial grade WEIBANG X700 and X760 Twin cylinder engines, giving up to 17 kW of power output.



LONG RANGE 15L FUEL TANK

To increase productivity all models are fitted with an extra large 15L fuel tank, allowing extended mowing times when covering large remote overgrown areas.

COMMERCIAL TRANSMISSION

Fitted with a commercial Peerless MST manual transmission to cope with the demands required when working in tough overgrown uneven terrain.



POWERED STEERING

Thanks to the integrated drum wheel brakes, simply pull the left lever to turn left, and the right lever to turn right, with near zero-turn ability.

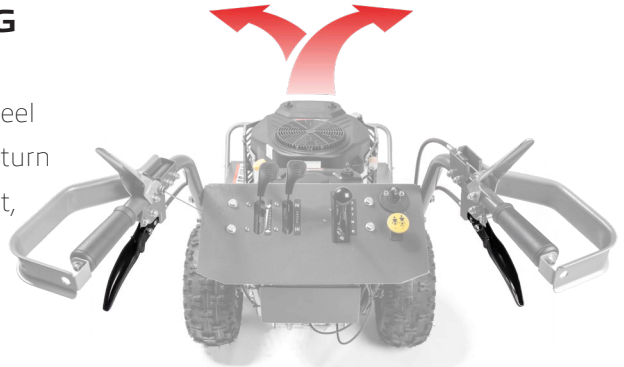

VELOCITY 68 WFP

PROFESSIONAL 27” / 68CM WHEELED FLAIL MOWER

P/N: WGVT80

WEIBANG®



1 year COMMERCIAL WARRANTY

LEARN MORE ABOUT THE 68 TFP

Model	**68 WFP**
Cutting Width (cm/”)	68 / 27
Cutter Deck	Steel / Pivoting
Transmission	CVT
Drive Speed	0 - 6.1 km/h
Blades	38 Y-Shaped Flail Blades
Powered Steering	Yes - Wheel Lock
Engine	WEIBANG X400
Height Adjustment	Central Winding Lever
Cutting Heights	10-90mm (infinite)

68 WFP KEY FEATURES -

- 27” / 68cm Cutting Width
- Patented CVT Drive
- Individual Wheel Brakes
- Heavy Duty Offroad Tyres
- Pivoting Deck with 38 Flail Blades
- WEIBANG X400 392cc Engine
- Fully Adjustable Handles
- Lockable Front Castors
- Integrated Deck Maintenance Stand

VELOCITY HIGHLIGHTS

PROFESSIONAL FLAIL MOWERS

68 WFP / 68 TFP

WEIBANG®

WIDE PIVOTING DECK

The wide 68cm flail mower deck is capable of working at maximum 25º, with a deck level indicator clearly visible by the operator. Another feature of the deck is the integrated maintenance stand.



COMMERCIAL FLAIL BLADES

The flail rotor features commercial grade bearings and is fitted with 38 specially designed Y-shaped blades for high cutting productivity in any conditions.





COMMERCIAL X400 ENGINE

Velocity Flail Mowers are fitted with the commercial grade WEIBANG X400 engine, with 392cc and 6.6kW of power. Featuring a commercial grade cylindrical filter element and large air filter for optimum performance.

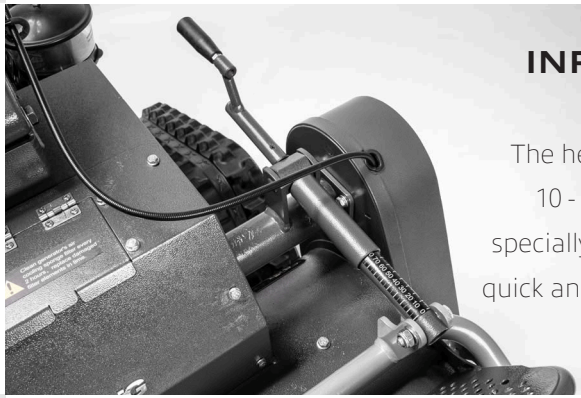

INFINITE HEIGHT OF CUT

The height of cut is easily adjusted between 10 - 90mm to suit any area and finish. The specially designed winding mechanism offers quick and easy infinite adjustment despite the machines heavy duty build quality.

FULLY ADJUSTABLE HANDLES

All models feature fully adjustable handles both up and down to suit the height of the operator, and side to side to allow the operator to stay clear of uncut material and for cutting along hedgerows.



WALK, STAND, REMOTE

The 68 TFP has the ability to be used in 3 modes. Use the machine as a walk-behind flail, or as a stand-on mower thanks to the foldaway platform. The optional remote control kit allows the machine to be controlled remotely by the operator.



VELOCITY 68 TFP

PROFESSIONAL 27” / 68CM TRACKED FLAIL MOWER

P/N: WGVT85

WEIBANG®



POWERED BY WEIBANG

1 year COMMERCIAL WARRANTY

LEARN MORE ABOUT THE 68 TFP

Model	**68 TFP**
Cutting Width (cm/”)	68 / 27
Cutter Deck	Steel / Pivoting
Transmission	Hybrid E-Drive
Drive Speed	0 - 3.8 km/h
Blades	38 Y-Shaped Flail Blades
Powered Steering	Yes - Individual Wheel Motors
Engine	WEIBANG X400
Height Adjustment	Central Winding Lever
Cutting Heights	10-90mm (infinite)

68 TFP KEY FEATURES -

- 27” / 68cm Cutting Width
- E-Drive up to 3.8 km/h
- Hybrid Drive with Dual Motors
- Heavy Duty Rear Tracks
- Pivoting Deck with 38 Flail Blades
- WEIBANG X400 392cc Engine
- Fully Adjustable Handles
- Walk Behind or Stand On Modes
- Optional Remote Control System

VELOCITY HIGHLIGHTS

PROFESSIONAL FLAIL MOWERS

68 WFP / 68 TFP

WEIBANG®

WIDE PIVOTING DECK

The wide 68cm flail mower deck is capable of working at maximum 25º, with a deck level indicator clearly visible by the operator. Another feature of the deck is the integrated maintenance stand.



COMMERCIAL FLAIL BLADES

The flail rotor features commercial grade bearings and is fitted with 38 specially designed Y-shaped blades for high cutting productivity in any conditions.





COMMERCIAL X400 ENGINE

Velocity Flail Mowers are fitted with the commercial grade WEIBANG X400 engine, with 392cc and 6.6kW of power. Featuring a commercial grade cylindrical filter element and large air filter for optimum performance.

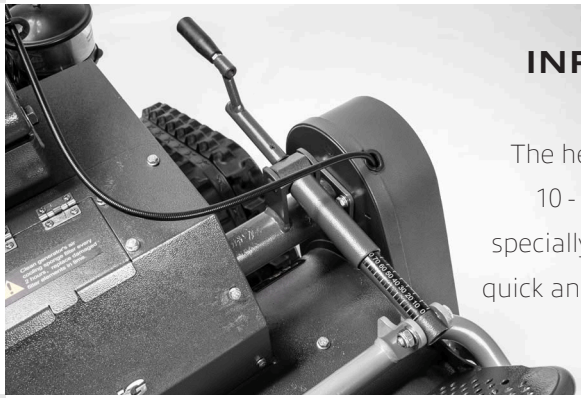

INFINITE HEIGHT OF CUT

The height of cut is easily adjusted between 10 - 90mm to suit any area and finish. The specially designed winding mechanism offers quick and easy infinite adjustment despite the machines heavy duty build quality.

FULLY ADJUSTABLE HANDLES

All models feature fully adjustable handles both up and down to suit the height of the operator, and side to side to allow the operator to stay clear of uncut material and for cutting along hedgerows.



WALK, STAND, REMOTE

The 68 TFP has the ability to be used in 3 modes. Use the machine as a walk-behind flail, or as a stand-on mower thanks to the foldaway platform. The optional remote control kit allows the machine to be controlled remotely by the operator.



VELOCITY 100 TRFP

PROFESSIONAL 39" / 100CM TRACKED REMOTE FLAIL MOWER

P/N: WGVT100

WEIBANG®



POWERED BY WEIBANG

1 year COMMERCIAL WARRANTY



Model	**100 TRFP**
Cutting Width (cm/")	100 / 39
Cutter Deck	Steel / Pivoting
Transmission	Hybrid E-Drive
Drive Speed	0, 3.4, 5.1 km/h
Blades	58 Y-Shaped Flail Blades
Powered Steering	Yes - Individual Wheel Motors
Engine	WEIBANG XC1000T E-Start
Height Adjustment	Remote Adjustment
Cutting Heights	5-90mm

100 TRFP KEY FEATURES -

- 39" / 100cm Cutting Width
- Remote E-Drive up to 5.1 km/h
- Hybrid Drive with Dual 1200W Motors
- Heavy Duty 180mm Tracks
- Floating Deck with 58 Flail Blades
- WEIBANG XC1000T 999cc V-Twin Engine
- Remote Control from 20m (50m Max)
- Remote Adjusted Cutting Height
- Work on slopes up to 30^0 / 57%

VELOCITY HIGHLIGHTS

PROFESSIONAL REMOTE FLAIL MOWER

100 TRFP

WEIBANG®

WIDE PIVOTING DECK

The wide 100cm flail mower deck features a heavy duty raised bumper to flatten material for cutting. The deck itself is capable of following the terrain thanks to a floating design.



COMMERCIAL FLAIL BLADES

The flail rotor features commercial grade bearings and is fitted with 58 specially designed Y-shaped blades for high cutting productivity in any conditions.





COMMERCIAL XC1000T ENGINE

Powered by the commercial-grade WEIBANG XC1000T 999cc V-Twin engine, delivering 35 hp with full-pressure lubrication, an external oil filter and cast-iron cylinder liners for outstanding durability, engine protection and reliable performance in the most demanding working conditions.

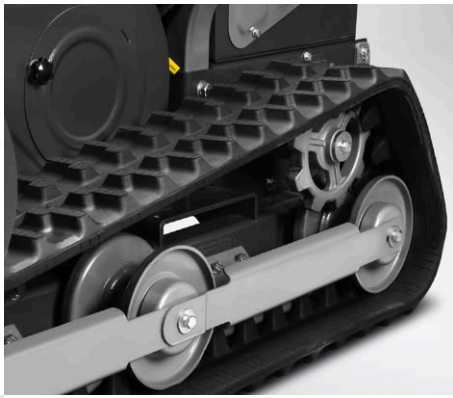

MAXIMUM TRACTION

Featuring 180mm tracks for unrivalled traction over any terrain, each track is driven by an independent electric wheel motor for zero-turn performance. As part of the hybrid power unit, the XC1000 engine drives both the cutting unit and an internal generator to powers the motors.

DUAL MOTOR DRIVE SYSTEM

As part of the hybrid power unit, the XC1000 engine drives both the cutting unit and aninternal generator which powers the dual motors. Each motor drives a track for zero-turn performance and total control across sloped terrain.

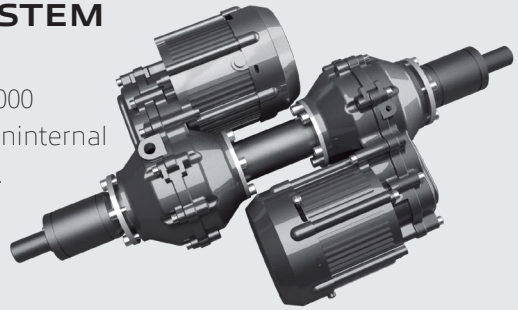

SAFE WORK ON SLOPES

The 100 TRFP is capable of continuous work at up to 30⁰ (57%). Perfect for extreme terrain in woodland, estates, motorways, municipal areas and in landscaping. Its low centre of gravity ensures maximum stability in the harshest environments, while ensuring operator safety at a distance.

